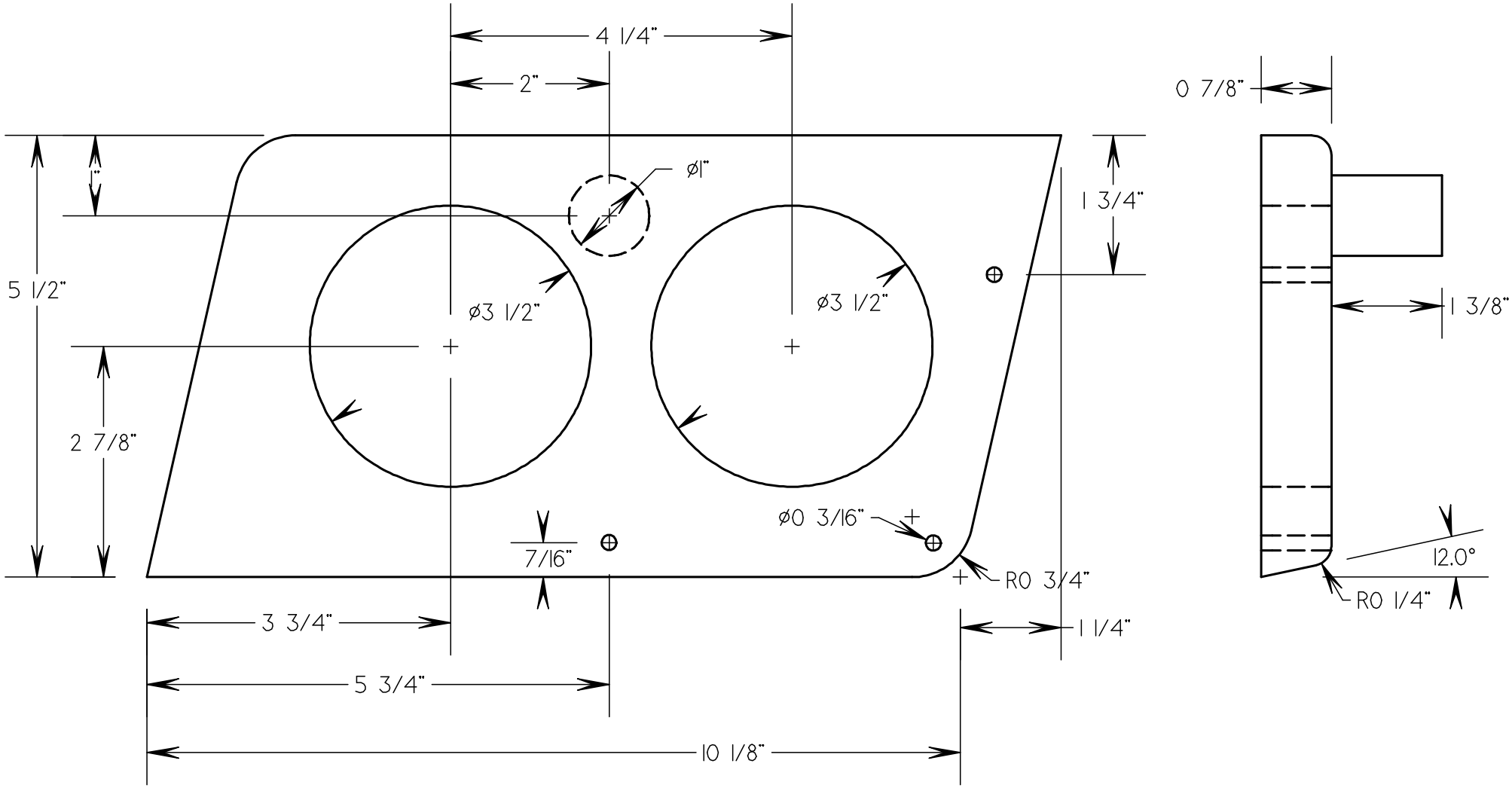


# REBEL MARKIV CUP HOLDERS AFT/STARBOARD 18JAN10 NER